© Siemens 2021

Overview



With the aid of the DCM 1271 data decoupling module, the AS-Interface network can also be supplied with 24 V DC or 30 V DC from a standard power supply unit and the transmission of data and power can be implemented on one cable.

The DCM 1271 data decoupling module has the same type of enclosure as an S7-1200 module and can therefore be perfectly combined with the AS-i Master CM 1243-2.

The DCM 1271 data decoupling module has no connection to the backplane bus of the SIMATIC S7-1200 and is therefore not counted as a communications module for the calculation of the maximum configuration.

Features of the DCM 1271 data decoupling module

- Design: S7-1200, 30 mm wide, degree of protection IP20
- Detachable terminals (included in delivery)
- Single data decoupling
- Supply of several AS-i networks with a single power supply unit
- Operation with 24 V DC or 30 V DC, grounded or non-grounded
- Current limitation at 4 A
- Integrated ground-fault detection
- Diagnostic LEDs for ground faults and overloads
- Signaling contact for ground-fault detection

Ground-fault detection

The integrated ground fault detection functions with grounded and non-grounded power supply: The connection of negative pole and ground (upstream from the data decoupling module) customary with 24 V DC power supplies is permitted. A ground fault to the negative or positive pole on the AS-Interface network (behind the data decoupling module) is identified and signaled via LED and a transistor output.

Benefits

- An existing standard power supply unit with 24 V DC or 30 V DC can be used for supplying AS-i networks
- The AS-Interface system can also be used in tightly budgeted applications because no AS-Interface power supply unit needs to be purchased
- Applications benefit in addition from the advantages of a modern bus system:
  - High level of standardization
  - Additional diagnostics and maintenance information
  - Faster commissioning

Application

The AS-Interface data decoupling module is designed for AS-Interface networks with 30 V or 24 V supply (AS-i Power24V).

Operation of an AS-i network with the data decoupling module and a 30 V standard power supply unit is technically equivalent to the use of an AS-Interface power supply unit and offers the service-proven features of AS-Interface for all applications.

AS-i Power24V uses a 24 V power supply unit in conjunction with a data decoupling module and is particularly suitable for

- Compact machines using AS-Interface input/output modules
- Applications in the control cabinet for AS-Interface integration of SIRIUS 3RT2 contactors using 3RA27 function modules

Note:

The power supply units must comply with the standard ES1 (IEC 62368-1) or PELV (Protective Extra Low Voltage) or SELV (Safety Extra Low Voltage), have a residual ripple of < 250 mV_{ss}, and in the event of a fault must limit the output voltage to a maximum of 40 V.

Recommended

- SITOP-power supplies, see https://mall.industry.siemens.com/mall/en/WW/Catalog/Products/10244081?tree=CatalogTree or https://support.industry.siemens.com/cs/ww/en/view/109745655
- PSN130S 30 V power supply units, see https://mall.industry.siemens.com/mall/en/WW/Catalog/Products/10174512?tree=CatalogTree.

Note on AS-i Power24V:

The length of an AS-i Power24V network is restricted to 50 m in order to limit the voltage drop along the cable.

AS-i Masters, AS-i slaves and the sensors and actuators supplied through the AS-i cable must be designed for the reduced voltage. Sensors and actuators for the standard voltage range of 10 to 30 V can be supplied with sufficient voltage.

Please also observe the requirements specified under "AS-i Power24V" for the operation of a AS-i Power24V network, see https://mall.industry.siemens.com/mall/en/WW/Catalog/Products/10057530?tree=CatalogTree.

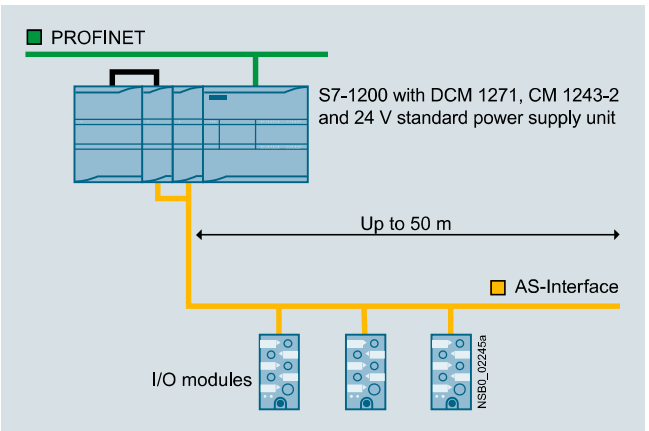

Configuration of an AS-i Power24V network with AS-Interface DCM 1271 data decoupling module

Siemens 6ES73387XF000AB0 | gesrepair.com | Call 877-249-1701 for Support

© Siemens 2021

Ordering data

	Article No.
DCM 1271 data decoupling module • With screw terminals, removable terminals (included in the scope of supply) • Current max.: 1 x 4 A • Dimensions (W × H × D / mm): 30 × 100 × 75	**3RK7271-1AA30-0AA0**
Accessories	
Screw terminals (replacement)	
• With screw terminals, 5-pole For AS-i Master CM 1243-2 and AS-i DCM 1271 data decoupling module	**3RK1901-3MA00**
• With screw terminals, 3-pole for AS-i DCM 1271 data decoupling module for connecting the power supply unit	**3RK1901-3MB00**
CM 1243-2 communications module • AS-Interface master for SIMATIC S7-1200 • Corresponds to AS-Interface Specification V3.0 • With screw terminals, removable terminals (included in the scope of supply) • Dimensions (W × H × D / mm): 30 × 100 × 75	**3RK7243-2AA30-0XB0**

More information

More information
Manual for AS-i Master CM 1234-2 and AS-i DCM 1271 data decoupling module, see https://support.industry.siemens.com/cs/ww/en/view/57358958
More information on AS-i Power24V, see "System Manual AS-Interface", https://support.industry.siemens.com/cs/ww/en/view/26250840

© Siemens 2021

Overview



DP-M	DP-S	FMS	PG/OP	S7
●			●	●

The CM 1243-5 communications module is used to connect a SIMATIC S7-1200 to PROFIBUS as a DP master and has the following characteristics:

- PROFIBUS DPV1 master in accordance with IEC 61158
- Support of up to 16 PROFIBUS DP slaves
- Communication with other S7 controllers based on S7 communication
- Allows programming devices and operator panels with PROFIBUS interfaces to be connected to the SIMATIC S7-1200
- Module replacement without programming device supported
- Support of all standard baud rates from 9.6 kbps to 12 Mbps
- Compact industrial enclosure in SIMATIC S7-1200 design for mounting on a DIN rail
- Fast commissioning thanks to easy configuration using STEP 7 without additional programming overhead

The CM 1243-5 is intended for use in factory automation. Low-cost PROFIBUS-based automation solutions can be created on the basis of the SIMATIC S7-1200 for optimal production.

Ordering data

	Article No.
CM 1243-5 communications module	
Communications module for electrical connection of SIMATIC S7-1200 to PROFIBUS as a DPV1 master	**6GK7243-5DX30-0XE0**
Accessories	
PROFIBUS FastConnect connection plug RS485	
With 90° cable outlet; insulation displacement technology, max. transmission rate 12 Mbps	
• Without programming device	**6ES7972-0BA52-0XA0**
• With programming device	**6ES7972-0BB52-0XA0**
PROFIBUS FC Standard Cable	
2-core bus cable, shielded, special design for fast mounting, delivery unit: max. 1000 m, minimum order quantity 20 m, sold by the meter	**6XV1830-0EH10**
PROFIBUS FastConnect Stripping Tool	
Stripping tool for fast stripping of the PROFIBUS FastConnect bus cable	**6GK1905-6AA00**
PROFIBUS bus terminal 12M	
Bus terminal for connection of PROFIBUS nodes up to 12 Mbps with connecting cable	**6GK1500-0AA10**

© Siemens 2021

Technical specifications

Article number	6GK7243-5DX30-0XE0
product type designation	CM 1243-5
transfer rate	
transfer rate	
• at the 1st interface acc. to PROFIBUS	9.6 kbit/s ... 12 Mbit/s
interfaces	
number of interfaces acc. to Industrial Ethernet	0
number of electrical connections	
• at the 1st interface acc. to PROFIBUS	1
• for power supply	1
type of electrical connection	
• at the 1st interface acc. to PROFIBUS	9-pin Sub-D socket (RS485)
• for power supply	3-pole terminal block
supply voltage, current consumption, power loss	
type of voltage of the supply voltage	DC
supply voltage external	24 V
supply voltage external at DC rated value	24 V
relative positive tolerance at DC at 24 V	20 %
relative negative tolerance at DC at 24 V	20 %
consumed current	
• from external supply voltage at DC at 24 V typical	0.1 A
power loss [W]	2.4 W
ambient conditions	
ambient temperature	
• for vertical installation during operation	0 ... 45 °C
• for horizontally arranged busbars during operation	0 ... 55 °C
• during storage	-40 ... +70 °C
• during transport	-40 ... +70 °C
relative humidity	
• at 25 °C without condensation during operation maximum	95 %
protection class IP	IP20
design, dimensions and weights	
module format	Compact module S7-1200 single width
width	30 mm
height	100 mm
depth	75 mm
net weight	0.134 kg
fastening method	
• 35 mm top hat DIN rail mounting	Yes
• S7-300 rail mounting	No
• wall mounting	Yes

Article number	6GK7243-5DX30-0XE0
product type designation	CM 1243-5
product features, product functions, product components general	
number of units	
• per CPU maximum	3
performance data PROFIBUS DP	
service as DP master	
• DPV1	Yes
number of DP slaves	
• on DP master operable	32
data volume	
• of the address range of the inputs as DP master total	512 byte
• of the address range of the outputs as DP master total	512 byte
• of the address range of the inputs per DP slave	244 byte
• of the address range of the outputs per DP slave	244 byte
• of the address range of the diagnostic data per DP slave	240 byte
service as DP slave	
• DPV0	No
• DPV1	No
performance data S7 communication	
number of possible connections for S7 communication	
• maximum	8; max. 4 connections to other S7 stations
• with PG connections maximum	1
• with PG/OP connections maximum	3
performance data multi-protocol mode	
number of active connections with multi-protocol mode	
• without DP maximum	8
• with DP maximum	8
performance data telecontrol	
protocol is supported	
• TCP/IP	No
product functions management, configuration, engineering	
configuration software	
• required	STEP 7 Basic/Professional

© Siemens 2021

Overview



- Unmanaged switch for connecting a SIMATIC S7-1200 to an Industrial Ethernet network with a line, tree or star topology
- Multiplication of Ethernet interfaces on a SIMATIC S7-1200 for additional connection of up to three programming devices, operator controls, and further Ethernet nodes
- Simple, space-saving mounting on the SIMATIC S7-1200 DIN rail
- Low-cost solution for implementing small, local Ethernet networks
- Connection without any problems using RJ45 standard plug connectors
- Simple and fast status display via LEDs on the device
- Integral autocrossover function permits use of uncrossed connecting cables

Ordering data

Ordering data	Article No.
CSM 1277 compact switch module Unmanaged switch for connecting a SIMATIC S7-1200 and up to three further nodes to Industrial Ethernet with 10/100 Mbps; 4 x RJ45 ports; external 24 V DC power supply, diagnostics on LEDs, S7-1200 module including electronic manual on CD-ROM	**6GK7277-1AA10-0AA0**
SIPLUS NET CSM 1277 compact switch module Unmanaged switch for connection of SIPLUS S7-1200 and up to three further stations to Industrial Ethernet with 10/100 Mbps; 4 x RJ45 ports; external 24 V DC power supply, LED diagnostics, S7-1200 module including electronic manual on CD-ROM	**6AG1277-1AA10-4AA0**
Accessories	
IE FC TP trailing cable 2 x 2 (Type C) 4-core, shielded TP installation cable for connection to IE FC outlet RJ45/ IE FC RJ45 plug 180/90 for use as trailing cable; PROFINET-compatible; with UL approval; sold by the meter; max. delivery unit 1 000 m, minimum order quantity 20 m	**6XV1840-3AH10**
IE FC RJ45 plug 180 2 x 2 RJ45 plug connector for Industrial Ethernet with a rugged metal housing and integrated insulation displacement contacts for connecting Industrial Ethernet FC installation cables; 180° cable outlet; for network components and CPs/CPUs with Industrial Ethernet interface	
• 1 pack = 1 unit	**6GK1901-1BB10-2AA0**
• 1 pack = 10 units	**6GK1901-1BB10-2AB0**
• 1 pack = 50 units	**6GK1901-1BB10-2AE0**
IE FC outlet RJ45 For connection of Industrial Ethernet FC cables and TP cords; graduated prices for 10 and 50 units or more	**6GK1901-1FC00-0AA0**
IE TP cord RJ45/RJ45	
• TP cord pre-assembled with 2 RJ45 plug connectors; length: 0.5 m	**6XV1850-2GE50**
• TP cable 4 x 2 with 2 RJ45 plug connectors; length: 0.5 m	**6XV1870-3QE50**

© Siemens 2021

3

Technical specifications

Article number	6GK7277-1AA10-0AA0
product type designation	SCALANCE CSM 1277
transfer rate	
transfer rate	10 Mbit/s, 100 Mbit/s
interfaces for communication integrated	
number of electrical connections	
• for network components or terminal equipment	4
number of 100 Mbit/s SC ports	
• for multimode	0
number of 1000 Mbit/s LC ports	
• for multimode	0
• for single mode (LD)	0
interfaces other	
number of electrical connections	
• for power supply	1
type of electrical connection	
• for power supply	3-pole terminal block
supply voltage, current consumption, power loss	
type of voltage 1 of the supply voltage	DC
• supply voltage 1 rated value	24 V
• power loss [W] 1 rated value	1.6 W
• supply voltage 1 rated value	19.2 ... 28.8 V
• consumed current 1 maximum	0.07 A
• type of electrical connection 1 for power supply	3-pole terminal block
• product component 1 fusing at power supply input	Yes
ambient conditions	
ambient temperature	
• during operation	0 ... 60 °C
• during storage	-40 ... +70 °C
• during transport	-40 ... +70 °C
relative humidity	
• at 25 °C without condensation during operation maximum	95 %
protection class IP	IP20
design, dimensions and weights	
design	SIMATIC S7-1200 device design
width	45 mm
height	100 mm
depth	75 mm
net weight	0.15 kg
fastening method	
• 35 mm top hat DIN rail mounting	Yes
• wall mounting	Yes
• S7-300 rail mounting	No
• S7-1500 rail mounting	No

Article number	6GK7277-1AA10-0AA0
product functions management, configuration, engineering	
product function	
• multiport mirroring	No
product function switch-managed	No
product functions redundancy	
product function	
• Parallel Redundancy Protocol (PRP)/operation in the PRP-network	Yes
• Parallel Redundancy Protocol (PRP)/Redundant Network Access (RNA)	No
standards, specifications, approvals	
standard	
• for FM	FM3611: Class 1, Divison 2, Group A, B, C, D / T.., CL.1, Zone 2, GP. IIC, T.. Ta
• for safety from CSA and UL	UL 508, CSA C22.2 No. 142
• for emitted interference	EN 61000-6-4 (Class A)
• for interference immunity	EN 61000-6-2
MTBF	273 y
standards, specifications, approvals CE	
certificate of suitability CE marking	Yes
standards, specifications, approvals hazardous environments	
standard for hazardous zone	EN 600079-15:2005, EN 600079-0:2006, II 3 G Ex nA II T4, KEMA 08 ATEX 0003 X
certificate of suitability	
• CCC for hazardous zone according to GB standard	Yes
standards, specifications, approvals other	
certificate of suitability	EN 61000-6-2, EN 61000-6-4
• C-Tick	Yes
• KC approval	No
standards, specifications, approvals marine classification	
Marine classification association	
• American Bureau of Shipping Europe Ltd. (ABS)	Yes
• French marine classification society (BV)	Yes
• Det Norske Veritas (DNV)	Yes
• Germanische Lloyd (GL)	No
• Lloyds Register of Shipping (LRS)	Yes
• Nippon Kaiji Kyokai (NK)	Yes
• Polski Rejestr Statkow (PRS)	No
• Royal Institution of Naval Architects (RINA)	No

More information

Selection Tool:

To support the selection of SCALANCE network components, the TIA Selection Tool is available at:

http://www.siemens.com/tst

© Siemens 2021

Overview



The CP 1243-1 communications processor is used for connecting the SIMATIC S7-1200 to telecontrol centers via remote networks and telecontrol protocols (DNP3, IEC 60870-5-104, TeleControl Basic), and for safe communication via IP-based networks.

The CP has the following features:

- Ethernet-based connection to TeleControl Server Basic, e.g. via Internet
- Data transfer of measured values, control variables, or alarms optimized for telecontrol systems
- Automatic sending of alert emails
- Data buffering of up to 64,000 values ensures a secure database even with temporary connection failures
- Secure communication via VPN connections based on IPSec
- Access protection via stateful inspection firewall
- Support of SINEMA Remote Connect with autoconfiguration
- Clearly laid out LED signaling for fast and easy diagnostics
- Compact industrial enclosure in S7-1200 design for mounting on a DIN rail
- Fast commissioning thanks to easy configuration using STEP 7

Ordering data

	Article No.
CP 1243-1 communications processor	
CP 1243-1 communications processor for connecting SIMATIC S7-1200 as an additional Ethernet interface and for connection to control centers via telecontrol protocols (DNP3, IEC 60870, TeleControl Basic), security (firewall, VPN)	**6GK7243-1BX30-0XE0**
Accessories	
Compact Switch Module CSM 1277	
Unmanaged switch for connecting a SIMATIC S7-1200 and up to three further nodes to Industrial Ethernet with 10/100 Mbps; 4 x RJ45 ports; external 24 V DC power supply, LED diagnostics, S7-1200 module including electronic device manual on CD-ROM	**6GK7277-1AA10-0AA0**
IE FC RJ45 plugs	
RJ45 connectors for Industrial Ethernet with a rugged metal enclosure and integrated insulation displacement contacts for connecting Industrial Ethernet FC installation cables	
IE FC RJ45 plug 180	
180° cable outlet; for network components and CPs/CPUs with Industrial Ethernet interface	
• 1 pack = 1 unit	**6GK1901-1BB10-2AA0**
• 1 pack = 10 units	**6GK1901-1BB10-2AB0**
• 1 pack = 50 units	**6GK1901-1BB10-2AE0**
IE FC TP standard cable GP 2 x 2 (Type A)	
4-core, shielded TP installation cable for connection to IE FC outlet RJ45/IE F RJ45 plug; PROFINET-compatible; with UL approval; sold by the meter; max. length 1 000 m, minimum order quantity 20 m	**6XV1840-2AH10**
IE FC Stripping Tool	
Pre-adjusted stripping tool for fast stripping of Industrial Ethernet FC cables	**6GK1901-1GA00**

Technical specifications

Article number	**6GK7243-1BX30-0XE0**
product type designation	CP 1243-1
transfer rate	
transfer rate	
• at the 1st interface	10 ... 100 Mbit/s
interfaces	
number of interfaces acc. to Industrial Ethernet	1
number of electrical connections	
• at the 1st interface acc. to Industrial Ethernet	1
• for power supply	0
type of electrical connection	
• at the 1st interface acc. to Industrial Ethernet	RJ45 port

Article number	**6GK7243-1BX30-0XE0**
product type designation	CP 1243-1
supply voltage, current consumption, power loss	
type of voltage of the supply voltage	DC
supply voltage 1 from backplane bus	5 V
consumed current	
• from backplane bus at DC at 5 V typical	0.25 A
power loss [W]	1.25 W

© Siemens 2021

Technical specifications

Article number	6GK7243-1BX30-0XE0
product type designation	CP 1243-1
ambient conditions	
ambient temperature	
• for vertical installation during operation	-20 ... +60 °C
• for horizontally arranged busbars during operation	-20 ... +70 °C
• during storage	-40 ... +70 °C
• during transport	-40 ... +70 °C
relative humidity	
• at 25 °C without condensation during operation maximum	95 %
protection class IP	IP20
design, dimensions and weights	
module format	Compact module S7-1200 single width
width	30 mm
height	110 mm
depth	75 mm
net weight	0.122 kg
fastening method	
• 35 mm top hat DIN rail mounting	Yes
• wall mounting	Yes
product features, product functions, product components general	
number of units	
• per CPU maximum	3
performance data open communication	
number of possible connections for open communication	
• by means of T blocks maximum	like CPU
performance data S7 communication	
number of possible connections for S7 communication	
• maximum	like CPU
performance data IT functions	
number of possible connections	
• as email client maximum	1
performance data telecontrol	
suitability for use	
• node station	No
• substation	Yes
• TIM control center	No
control center connection	For use with TeleControl Server Basic, WinCC and PCS7
• by means of a permanent connection	supported
• note	Connection to SCADA system via Telecontrol Server Basic and Standard Telecontrol protocols
protocol is supported	
• DNP3	Yes
• IEC 60870-5	Yes
product function data buffering if connection is aborted	Yes; 64,000 events
number of data points per station maximum	500
number of stations for direct communication with Telecontrol Server Basic	
• in send direction maximum	3
• in receive direction maximum	15

Article number	6GK7243-1BX30-0XE0
product type designation	CP 1243-1
performance data teleservice	
diagnostics function online diagnostics with SIMATIC STEP 7	Yes
product function	
• program download with SIMATIC STEP 7	Yes
• remote firmware update	Yes
product functions management, configuration, engineering	
configuration software	
• required	STEP 7 Basic/Professional
product functions diagnostics	
product function web-based diagnostics	Yes
product functions security	
firewall version	stateful inspection
product function with VPN connection	IPsec, SINEMA RC
type of encryption algorithms with VPN connection	AES-256, AES-192, AES-128, 3DES-168
type of authentication procedure with VPN connection	Preshared key (PSK), X.509v3 certificates
type of hashing algorithms with VPN connection	MD5, SHA-1, SHA-2
number of possible connections with VPN connection	8
product function	
• password protection for Web applications	No
• password protection for teleservice access	No
• encrypted data transmission	Yes
• ACL - IP-based	No
• ACL - IP-based for PLC/routing	No
• switch-off of non-required services	Yes
• blocking of communication via physical ports	No
• log file for unauthorized access	No
product functions time	
protocol is supported	
• NTP	Yes
• NTP (secure)	Yes
time synchronization	
• from NTP-server	Yes
• from control center	Yes

© Siemens 2021

Overview



The CP 1242-7 GPRS V2 communications processor is used to connect a SIMATIC S7-1200 to the globally available GSM/GPRS mobile radio network and has the following characteristics:

- Worldwide wireless exchange of data between S7-1200 controllers and/or between S7-1200 controllers and control centers with an Internet connection
- Communication based on the GPRS (**G**eneral **P**acket **R**adio **S**ervice) mobile wireless service with data transmission speeds of up to 86 kbps in the downlink and 43 kbps in the uplink
- GPRS mode with fixed IP addresses and dynamic IP addresses with standard mobile phone contract
- Time synchronization based on NTP (**N**etwork **T**ime **P**rotocol)
- Sending and receiving of text messages
- LED signaling for fast diagnostics
- Compact industrial enclosure in S7-1200 design for mounting on a DIN rail
- Fast commissioning thanks to easy configuration using STEP 7

In conjunction with the TeleControl Server Basic software, the CP 1242-7 forms a telecontrol system with additional properties:

- Connection of up to 5000 telecontrol stations to the control center via an OPC interface
- Data buffering in the substations in the event of connection failures
- Central status monitoring of the substations
- No special provider services required for fixed IP addresses
- Teleservice access with STEP 7 to the substations via the Internet

The CP 1242-7 V2 is a new product version of the CP 1242-7. The concept for process data transmission has been expanded with a simple data point configuration, which enables substantially easier commissioning without high programming overhead and minimizes susceptibility to errors during the projects implementation phase. CP 1242-7 has also been equipped with new functions, such as access to the internal web server of the S7-1200. This opens up numerous new application areas.

Ordering data

	Article No.
Communications processor CP 1242-7 GPRS[1]	
Communications processor CP 1242-7 GPRS V2 for connecting SIMATIC S7-1200 to TeleControl Server Basic via GSM/GPRS mobile radio network	**6GK7242-7KX31-0XE0**
Accessories	
ANT794-4MR antenna	**6NH9860-1AA00**
Omnidirectional antenna for GSM (2G), UMTS (3G) and LTE (4G) networks; omnidirectional; weatherproof for indoor and outdoor use; 5 m cable with fixed connection to antenna; SMA connector; including mounting bracket, screws, wall plugs	
ANT794-3M antenna	**6NH9870-1AA00**
Flat panel antenna for GSM (2G) networks, for triband with 900/1 800/1 900 MHz; weatherproof for indoor/outdoor use, 1.2 m cable with fixed connection to antenna; SMA connector, incl. assembly adhesive tape	

[1] Please note country approvals under:
www.siemens.com/mobilenetwork-approvals

Technical specifications

Article number	**6GK7242-7KX31-0XE0**
product type designation	CP 1242-7 V2
transfer rate	
transfer rate	
• for GPRS transmission	
- with downlink maximum	86 kbit/s
- with uplink maximum	43 kbit/s
interfaces	
number of interfaces acc. to Industrial Ethernet	0
number of electrical connections	
• for external antenna(s)	1
• for power supply	1
number of slots	
• for SIM cards	1
type of electrical connection	
• for external antenna(s)	SMA socket (50 ohms)
• for power supply	3-pole terminal block
slot version	
• for SIM card	Standard

© Siemens 2021

3

Technical specifications

Article number	6GK7242-7KX31-0XE0
product type designation	CP 1242-7 V2
wireless technology	
type of mobile wireless service	
• is supported SMS	Yes
• is supported GPRS	Yes
• note	GPRS (Multislot Class 10)
type of wireless network is supported	
• GSM	Yes
• UMTS	No
• LTE	No
operating frequency	
• 850 MHz	Yes
• 900 MHz	Yes
• 1800 MHz	Yes
• 1900 MHz	Yes
transmit power	
• at operating frequency 900 MHz	2 W
• at operating frequency 1800 MHz	1 W
• at operating frequency 1900 MHz	1 W
supply voltage, current consumption, power loss	
type of voltage of the supply voltage	DC
supply voltage external	24 V
supply voltage external at DC rated value	24 V
relative positive tolerance at DC at 24 V	20 %
relative negative tolerance at DC at 24 V	20 %
consumed current	
• from external supply voltage at DC at 24 V typical	0.1 A
• from external supply voltage at DC at 24 V maximum	0.22 A
power loss [W]	2.4 W
ambient conditions	
ambient temperature	
• for vertical installation during operation	-20 ... +60 °C
• for horizontally arranged busbars during operation	-20 ... +70 °C
• during storage	-40 ... +70 °C
• during transport	-40 ... +70 °C
relative humidity	
• at 25 °C without condensation during operation maximum	95 %
protection class IP	IP20
design, dimensions and weights	
module format	Compact module S7-1200 single width
width	30 mm
height	100 mm
depth	75 mm
net weight	0.133 kg
fastening method	
• 35 mm top hat DIN rail mounting	Yes
• S7-300 rail mounting	No
• wall mounting	Yes

Article number	6GK7242-7KX31-0XE0
product type designation	CP 1242-7 V2
product features, product functions, product components general	
number of units	
• per CPU maximum	3
performance data	
number of users/telephone numbers definable maximum	10
performance data open communication	
number of possible connections for open communication	
• by means of T blocks maximum	like CPU
performance data IT functions	
number of possible connections	
• as email client maximum	1
performance data telecontrol	
control center connection	Telecontrol Server Basic
• by means of a permanent connection	supported
• by means of demand-oriented connection	supported
• note	Connection to SCADA system using OPC interface
protocol is supported	
• DNP3	No
• IEC 60870-5	No
product function data buffering if connection is aborted	Yes; 64,000 events
number of stations for direct communication with Telecontrol Server Basic	
• in send direction maximum	3
• in receive direction maximum	15
performance data teleservice	
diagnostics function online diagnostics with SIMATIC STEP 7	Yes
product function	
• program download with SIMATIC STEP 7	Yes
• remote firmware update	Yes
product functions management, configuration, engineering	
configuration software	
• required	STEP 7 Basic/Professional
product functions diagnostics	
product function web-based diagnostics	Yes
product functions security	
product function	
• password protection for teleservice access	Yes
• encrypted data transmission	Yes
product functions time	
protocol is supported	
• NTP	Yes
time synchronization	
• from control center	Yes

© Siemens 2021

Overview



CP 1243-7 LTE is used to connect the S7-1200 to a mobile wireless 4th Generation LTE (Long Term Evolution) network. The increased data rates compared to GPRS and widespread introduction of LTE open up new areas of application.
The CP1243-7 is characterized by the following properties:

- 1 connection to LTE (4G) mobile wireless network (various versions for EU and North America)
- Data transfer of measured values, control variables, or alarms optimized for telecontrol systems
- Operation with fixed IP addresses and dynamic IP addresses with standard cellular phone contract
- Time synchronization based on NTP (Network Time Protocol)
- "On-demand" connection setup via voice call or SMS
- Sending and receiving of SMS
- Teleservice access with STEP 7 to substations via mobile wireless networks
- Compact industrial enclosure in S7-1200 design for mounting on a DIN rail
- Temperature range in operation: -20°C to +70°C
- DIN rail mounting
- Diagnostics LEDs (overall status and details)
- Integrated security functions (VPN and firewall)
- Access to the CPU web server
- Fast commissioning due to simplified configuration with STEP 7
- Data buffering of up to 64 000 values ensures a secure database even with temporary connection failures
- Support of SINEMA Remote Connect with autoconfiguration

Ordering data

	Article No.
Communication processor CP 1243-7 LTE	
Communication processor for connecting SIMATIC S7-1200 to TeleControl Server Basic via LTE mobile wireless network	
• **CP 1243-7 LTE EU** Frequencies in European band: 700, 1 700 MHz	**6GK7243-7KX30-0XE0**
Frequencies in European band: 700, 1 700 MHz	
• **CP 1243-7 LTE US** Frequencies in North American band: 800, 1 800, 2 600 MHz	**6GK7243-7SX30-0XE0**
Accessories	
ANT794-4MR antenna	**6NH9860-1AA00**
Omnidirectional antenna for GSM (2G), UMTS (3G) and LTE (4G) networks; omnidirectional; weatherproof for indoor and outdoor use; 5 m cable with fixed connection to antenna; SMA connector; including mounting bracket, screws, wall plugs	